Spare Parts Catalogue

Version: 2010/06/23a EN

Invacare® LYNX

General Information

For any order of spare parts the following information is required:

- *Product type*
- *Product name & model*
- *Serial Number*
- *Part-Number*
- *Part-Description*

Exploded view drawings and code numbers are not contractual and subject to modification, in relation to Invacare® continous product improvement policy to meet end users needs.

The reproduction or use of this work, or of any substantial part of this work, in any form or by any electronic, mechanical or other means, including photocopying, scanning and recording, and in any information storage and retrieval system, including electronic transmission, is forbidden without the prior written permission of Invacare® International Sarl.

TABLE OF CONTENTS

Information

User Manuals Lynx 5

Chassis

Chassis 6
Shrouds 7

Seat

Seat 8

Front Wheels

Front Wheels 9

Rear Wheels

Rear Wheels 10

Propulsion

Propulsion, details 11
Propulsion 12

Controls Drive

Steering unit, details 13
Steering unit, details 15

Cable & Charger

Electronic 16
Programming-Kit 18

Others Options & Accessories

Accessories Lynx 19

User Manuals Lynx

CS ČESKY	FR FRANÇAIS	PL POLSKI
DA DANSK	HR HRVATSKI	PT PORTUGUÊS
DE DEUTSCH	HU MAGYAR	SK SLOVENČINA
EN ENGLISH	IT ITALIANO	SL SLOVENŠČINA
ES ESPAÑOL	LT LIETUVIŲ KALBA	SV SVENSKA
ET EESTI KEEL	NL NEDERLANDS	RO ROMÂNĂ
FI SUOMEN KIELI	NO NORSK	JA 日本語

Pos.	Part number	Description	Valid from → until	Qty
DE	1506976	User Manual Lynx German		1
EN	1506988	User Manual Lynx English		1
FR	1506994	User Manual Lynx French		1
ES	1507139	User Manual Lynx Spanish		1
PT	1507140	User Manual Lynx Portuguese		1
NL	1507141	User Manual Lynx Dutch		1
SV	1509691	User Manual Lynx Swedish		1
SL	1509985	User Manual Lynx Slovenian		1
CZ	1510575	User Manual Lynx Czech		1
PL	1510576	User Manual Lynx Polish		1
HR	1510577	User Manual Lynx Croatian		1
LT	1510578	User Manual Lynx Lithuanian		1
ET	1510844	User Manual Lynx Estonian		1
FI	1527872	User Manual Lynx Finsk		1

Chassis

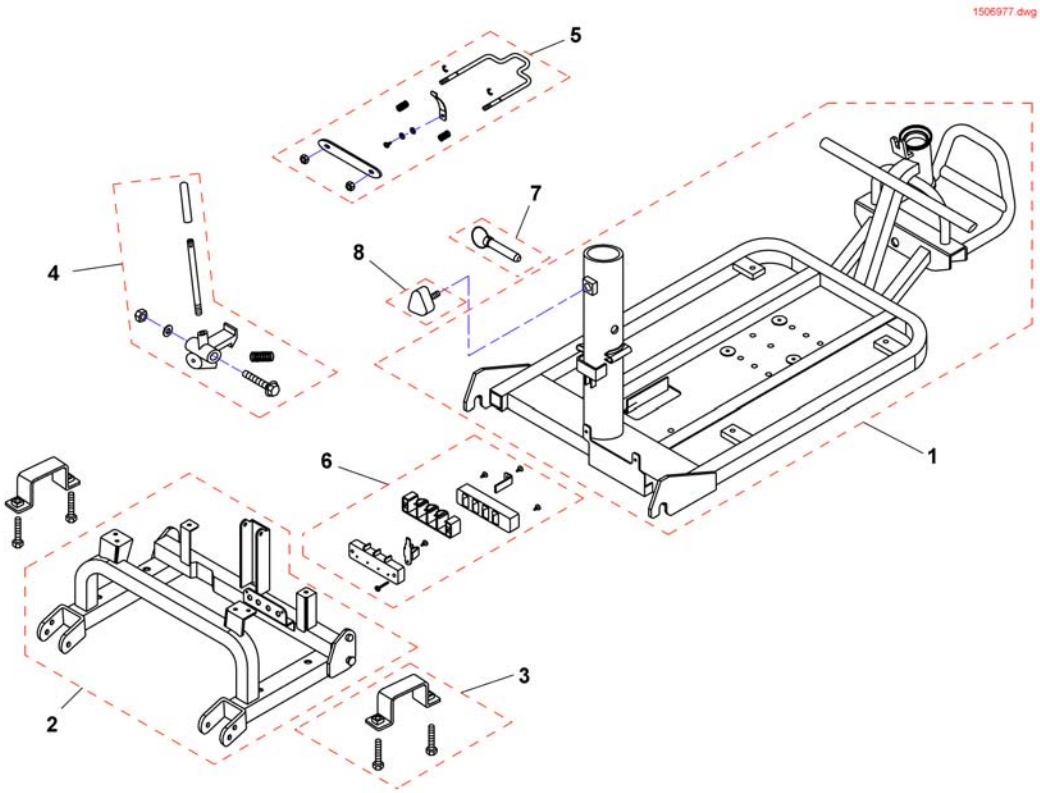

Pos.	Part number	Description	Valid from → until	Qty
1	SP1541552	FRAME COMP., FRONT *From SN:*	20100301 →	1
1	1506977	FRAME COMP. , FRONT	→ 20100228	1
2	SP1541553	FRAME COMP., REAR *From SN:*	20100301 →	1
2	1506989	FRAME COMP. , REAR	→ 20100228	1
3	1507137	HOLDER , DIFFERENTIAL, CPL.		1
4	1507138	HOOK, FRAME, CPL.		1
5	1507136	LOCK, BATTERY BOX, CPL.		1
6	1507134	HOLDER, TERMINALS B, CPL.		1
7	1507004	GUIDE PIN , SEAT HOLDER		1
8	1507005	Star Handle		1

Shrouds

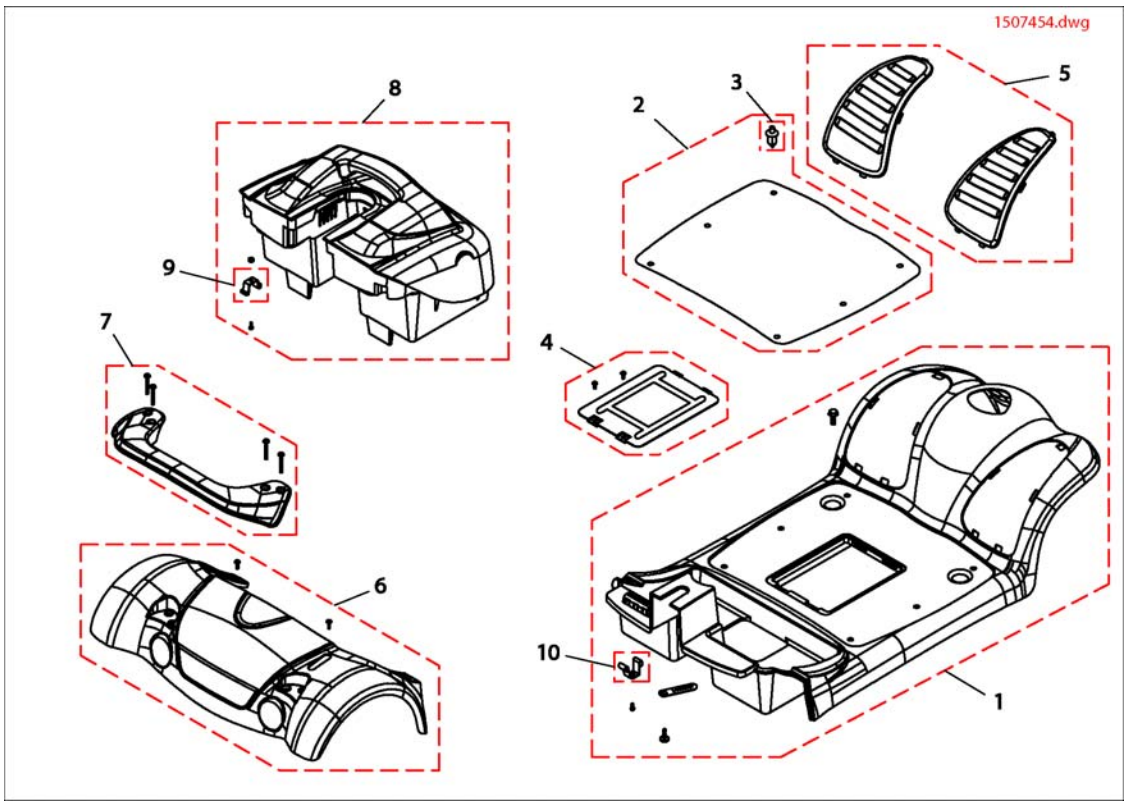

Pos.	Part number	Description	Valid from → until	Qty
1	1507454	FRONT BODY BLUE CPL.		1
1	1507468	FRONT BODY SILVER CPL.		1
1	1509672	SHROUT, FRONT, RED		1
1	SP1541556	FRONT BODY ONYXBLUE CPL.		1
2	1507783	RUBBER PAD, CPL.		1
3	1505476	Push Rivet, Pad		6
4	1507471	COVER, CONTROLLER, CPL.		1
5	1507782	PAD, FRONT PEDAL LH+RH		1
6	1507475	SHROUD, REAR, BLUE CPL.		1
6	1507781	SHROUD, REAR, SILVER CPL.		1
6	1509673	SHROUD, REAR, RED, CPL.		1
6	SP1541557	SHROU, REAR, ONYXBLUE CPL.		1
7	1507779	HANDLE, REAR, CPL.		1
8	1507767	BATTERY BOX COMPLETE (NO BATTERYS INCL.)		1
9	1507770	TERMINALS FOR BAT. A		3
10	1507777	TERMINALS FOR BAT. B		3

Seat

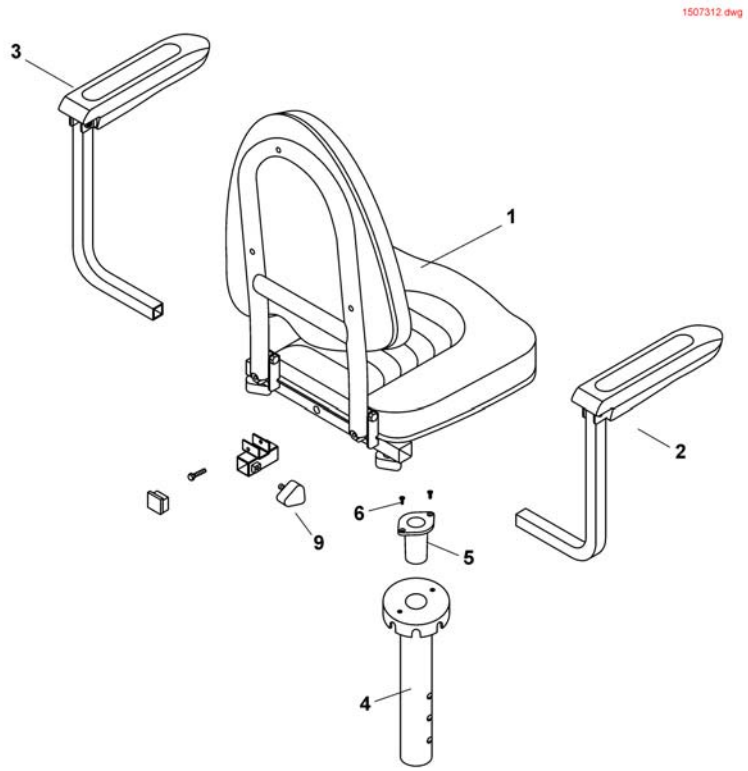

Pos.	Part number	Description	Valid from → until	Qty
1	1507312	SEAT ASSEMBLY		1
2	1507357	HANDRAIL ASSEMBLY Rh		1
3	1507358	HANDRAIL ASSEMBLY Lh		1
4	1507359	HOLDER , GUIDE		1
5	-	GUIDE,SEAT BRACKET		1
6	-	BOLT (M4X10L)		2
5,6	1507373	GUIDE,SEAT BRACKET, CPL.		1
7	-	HOLDER		1
8	-	BOLT (M6X40L)		1
9	1507005	Star Handle		1
10	-	PLUG		1

Front Wheels

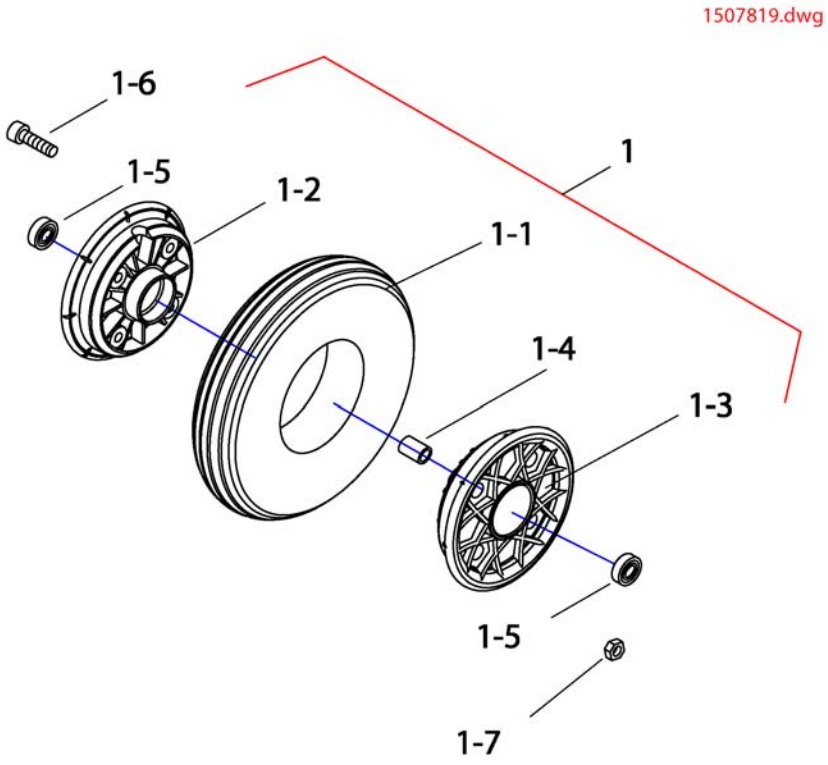

Pos.	Part number	Description	Valid from → until	Qty
1-7	-	Nylon Nut		8
1-1	-	TIRE COMP		2
1-2	-	RIM INNER		2
1-3	-	RIM OUTER		2
1-4	-	SPACER		2
1-5	-	BEARING , WHEEL (6001ZZ)		4
1-6	-	BOLT (M6X25L)		8
1	1507819	FRONT WHEEL ASSEMBLY		2

Rear Wheels

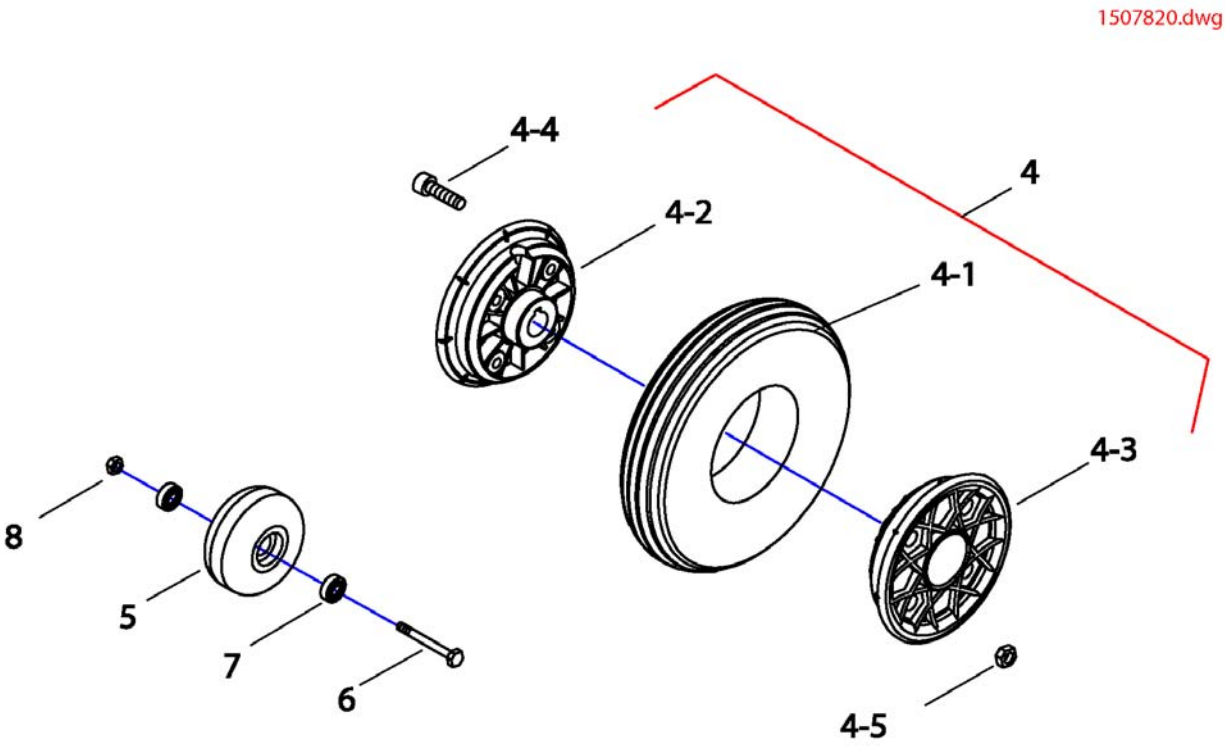

Pos.	Part number	Description	Valid from → until	Qty
4-3	-	RIM OUTER		2
4-4	-	BOLT (M6X25L)		8
5-8	1507864	WHEEL, ANTI-TIPPER, CPL.		1
4-5	-	Nylon Nut		8
4-2	-	RIM INNER		2
4-1	-	TIRE COMP		2
4	1507820	REAR WHEEL ASSEMBLY		2
5	-	WHEEL, ANTI-TIPPER		2
6	-	Bolt, Anti Tipper (M6x40)		2
7	-	Bearing, Anti-Tipper		4
8	-	Nylon Nut		2

Propulsion, details

1505607.dwg

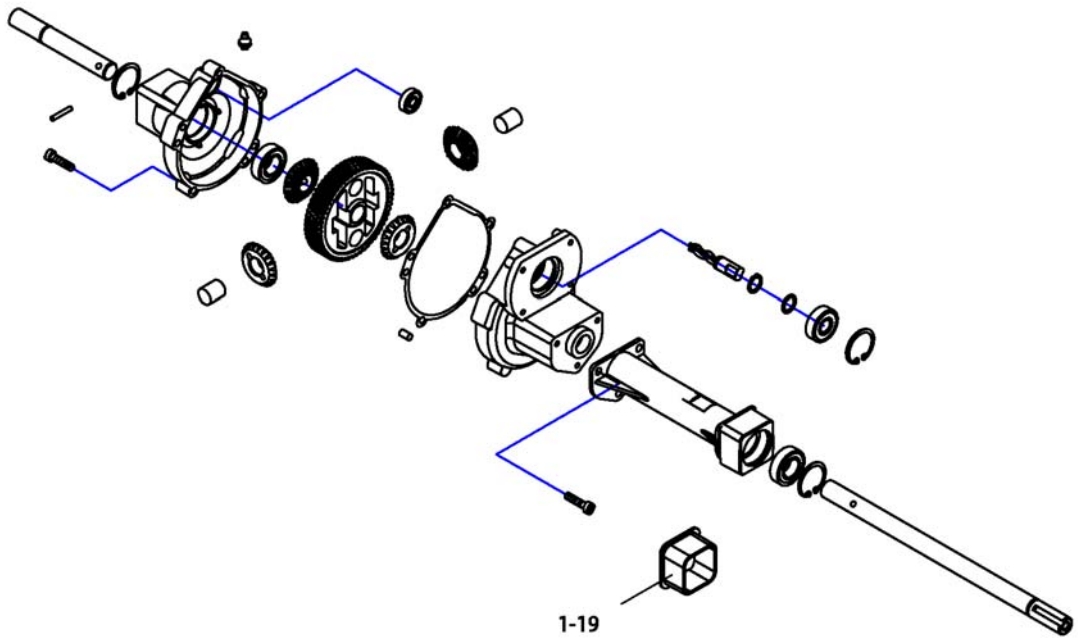

Pos.	Part number	Description	Valid from → until	Qty
1-19	1505607	Rubber, Shock		1

Propulsion

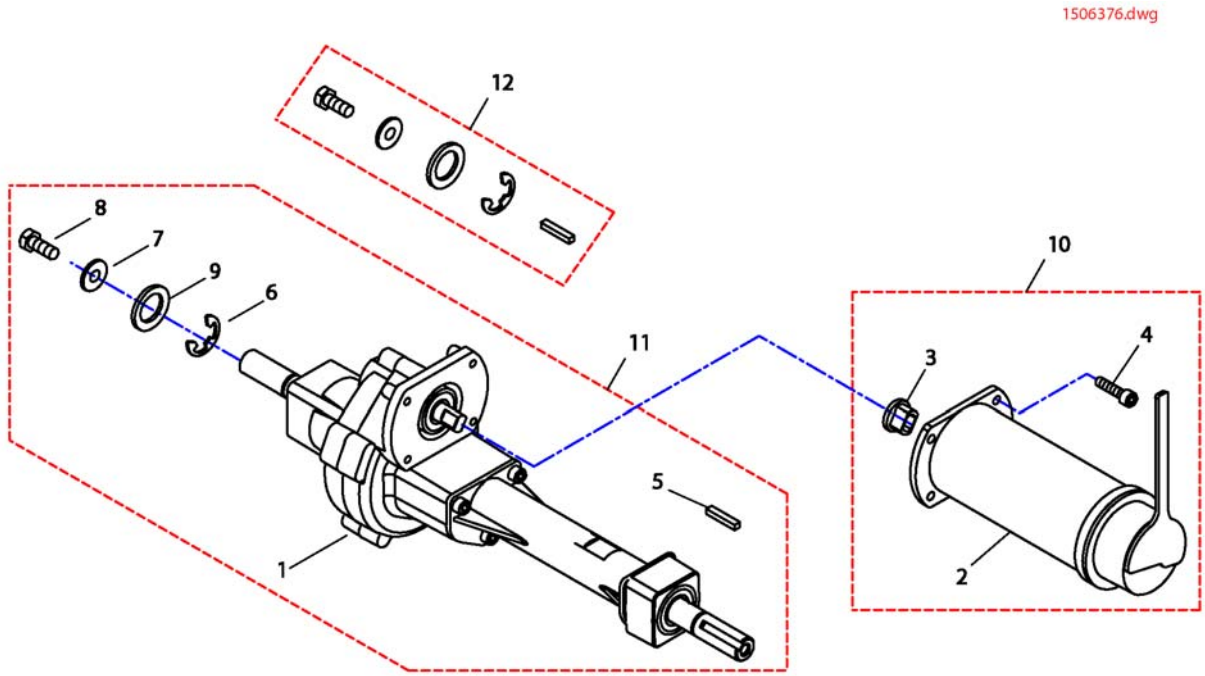

Pos.	Part number	Description	Valid from → until	Qty
1	-	DIFFERENTIAL		1
2	-	MOTOR ASSEMBLY		1
3	1505667	Guide		1
5	-	Key		2
6	-	E RING		2
7	-	PLANE WASHER		2
8	-	Bolt (M8x20)		2
9	-	PLANE WASHER		2
10	1506376	MOTOR ASSEMBLY CPL.		1
11	1507865	DIFFERENTIAL CPL.		1
12	1509675	Installation kit-wheel		1

Steering unit, details

1507142.dwg

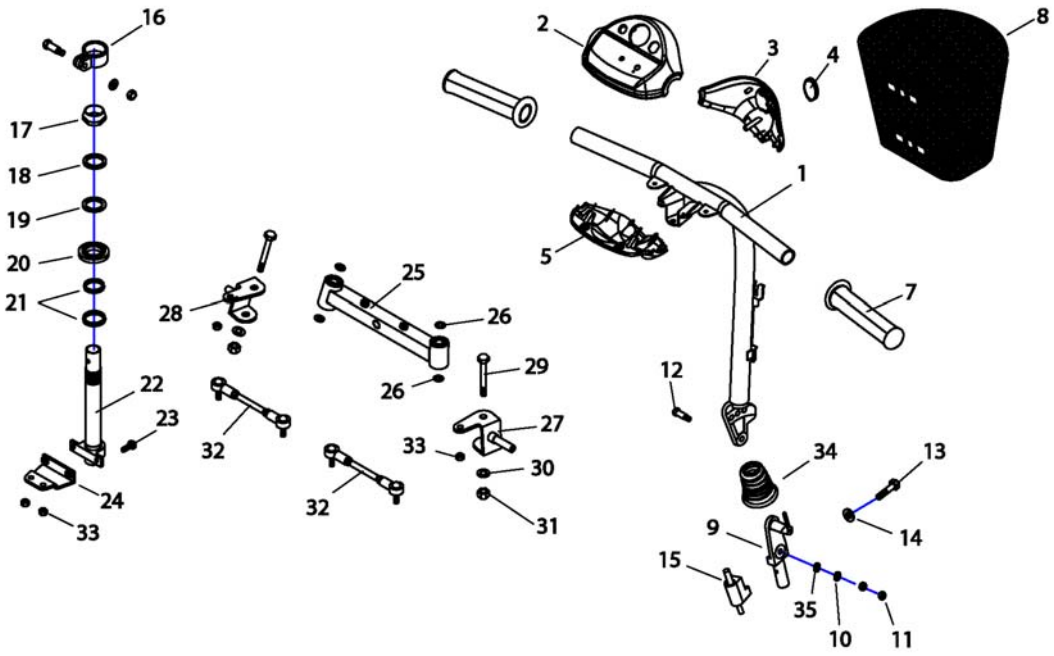

Pos.	Part number	Description	Valid from → until	Qty
26,28-31, 33	1507299	AXLE LH, CPL.		1
9-15, 35	1507189	STEERING ADJ LOWER CPL.		1
33,16-24	1507234	BAR ASSEMBLY, CPL.		1
26,27,29-31	1507298	AXLE RH, CPL.		1
1	1507142	STEERING BAR CPL.		1
2	1507143	COVER , STEERING UPPER		1
3	SP1541554	COVER, STEERING FRONT, ONYXBLUE		1
3	1507144	COVER , STEERING FRONT, RED		1
3	1509677	COVER STEERING, FRONT, SILVER		1
3	1509676	COVER STEERING, FRONT, BLUE		1
4	1507145	REFLECTOR		1
5	1509678	COVER STEERING, REAR, BLUE		1
5	SP1541555	COVER, STEERING REAR, ONYXBLUE		1
5	1507146	COVER , STEERING REAR, RED		1
5	1509679	COVER, STEERING REAR, SILVER		1
6	-	TAPPING SCREW , COVER (4X16L)		6
7	1505415	Grip, Handle Bar		2
8	1507160	Basket, front		1
9	-	STEERING ADJ LOWER		1
10	-	PLANE WASHER		1
11	-	NYLON NUT		2
12	-	BOLT, STEERING ADJ UPPER		1
13	-	Bolt, Joint		1
14	-	WASHER		1
15	-	GUIDE COMP.		1
16	-	Padlock		1
17	-	Nut, Steering Stem Lock		1

Steering unit, details

Pos.	Part number	Description	Valid from → until	Qty
18	-	Plane Washer		1
19	-	Washer Tooth		1
20	-	Race, Steering Outer Upper		1
21	-	Balls Set		1
22	-	BAR ASSEMBLY		1
23	-	Bolt (M6x16)		1
24	-	PLATE		1
25	1507237	SWING ASSEMBLY		1
26	-	NYLON WASHER		4
27	-	AXLE RH		1
28	-	AXLE LH		1
29	-	BOLT, FRONT AXLE		2
30	-	Plane Washer		2
31	-	Nylon Nut		1
32	1507271	ROD ASSEMBLY		2
33	-	Nylon Nut		4
34	1505401	Cover Steering		1
35	-	NYLON WASHER		1

Steering unit, details

1506392.dwg

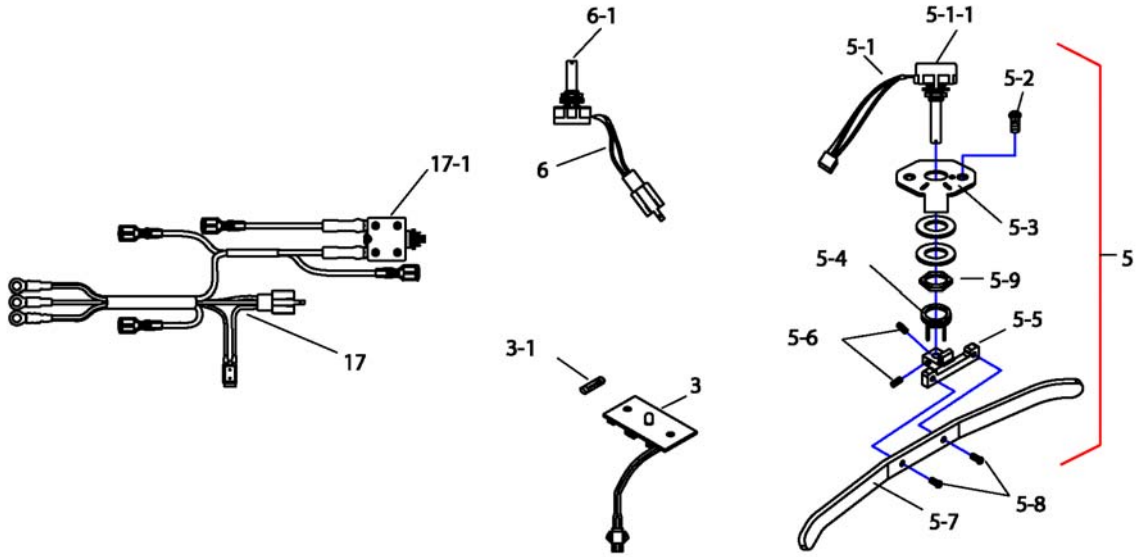

Pos.	Part number	Description	Valid from → until	Qty
17-1	-	PROTECTOR BREAKER 40.0Amp		1
5-2	-	Bolt (M4x12)		2
5-8	-	Bolt (M4x12)		1
3-1	1507392	FUSE, P.C.BOARD3.0Amp		1
5-1	-	VARIABLE RESISTOR,THROTTLE ASSEMBLY		1
5-1-1	-	VARIABLE RESISTOR		1
5-3	-	SHELF, STARTER VARIABLERESISTOR		1
5-4	-	SPRING, START LEVER		1
5-5	-	HOLDER, STARTER BAR		1
5-6	-	BOLT, VARIABLE RESISTOR M4×5L		2
5-7	-	STARTER BAR		1
5-9	-	V.R.COLLAR		1
6-1	-	VARIABLE RESISTOR 30.0K		1
3	-	P.C.BOARD, COMP METER		1
5	1506394	STARTER ASSEMBLY		1
6	1506395	VARIABLE RESISTOR ASSEMBLY 30.0KO		1
17	1506481	WIRE HARNESS, BATTERY		1

Electronic

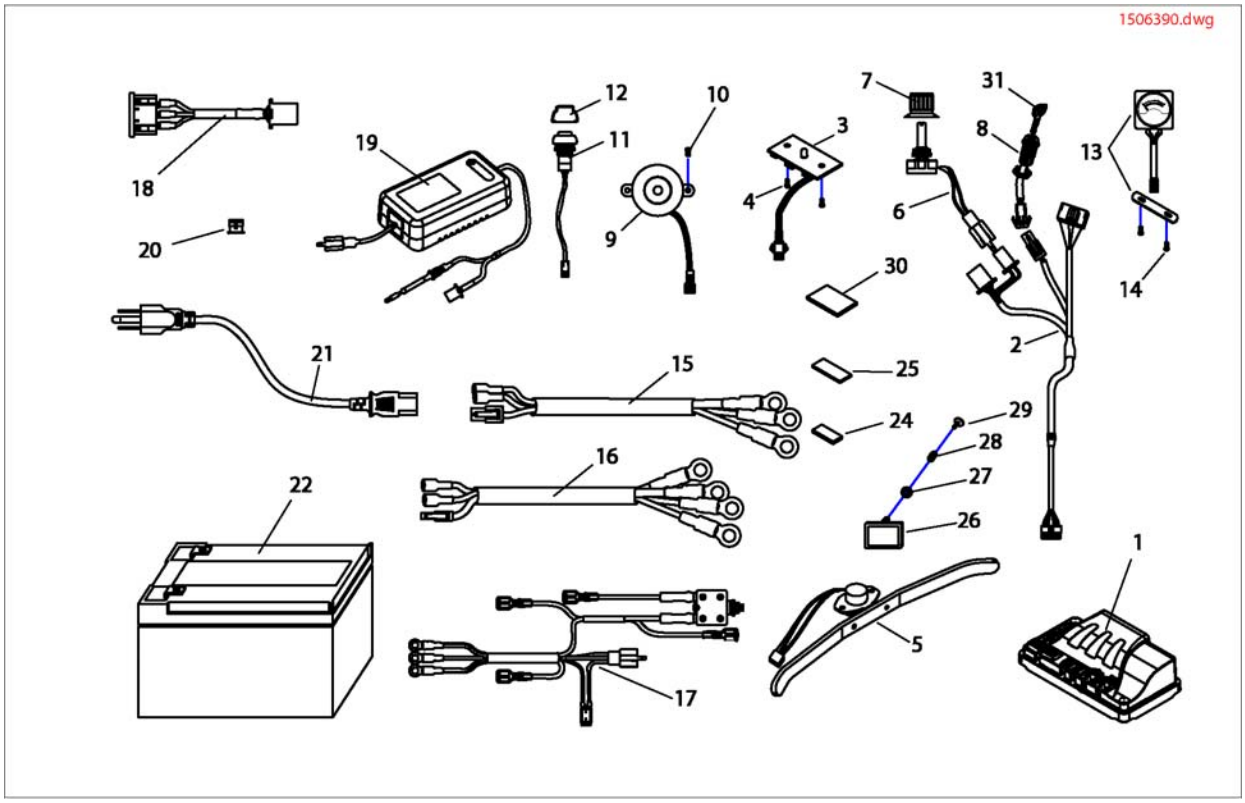

Pos.	Part number	Description	Valid from → until	Qty
26-30	1506691	COVER, AC INLET		1
1	1506390	CONTROLLER dynamic DR-50		1
2	1506391	WIRE, HARNESS		1
3	-	P.C.BOARD, COMP METER		1
3,4	1506890	P.C.BOARD, CPL.		1
4	-	SCREW		2
5	1506394	STARTER ASSEMBLY		1
6	1506395	VARIABLE RESISTOR ASSEMBLY 30.0KO		1
7	1506410	KNOB, SPEED CONTROL		1
8	1506411	MAIN SWITCH, KEY 2-POLE		1
9,10	1506891	BUZZER CPL.		1
9	-	BUZZER COMP		1
10	-	SCREW		2
11	-	SWITCH COMP, HORN 2-POLE		1
11,12	1506892	SWITCH HORN, CPL.		1
12	-	SWITCH COMP, SPLASH CAPS		1
13	-	METER, VOLTMETER COMP.		1
13,14	1506893	METER, VOLTMETER CPL.		1
14	-	Screw (M3x10)		1
15	1506424	WIRE, BATTERY		1
16	1506425	WIRE, MOTOR & BRAKE		1
17	1506481	WIRE HARNESS, BATTERY		1
18	1506490	POWER INLET ASSEMBLY		1
19	1506491	ON-BOARD DC24V-2.0Amp		1
20	1506492	WIRE, BATTERY & CHARGE		1
21	P21080	UK 3 Pin Mains Lead		1
21	P21079	Charger Power Cable (Shockproof Plug)		1
22	1506493	LEAD-ACID, BATTERY 12V-12AH		2
24	1506689	VEL-CRO (50L)		2

Electronic

Pos.	Part number	Description	Valid from → until	Qty
25	1506690	VEL-CRO (50L)		2
26	1506691	COVER, AC INLET		1
27	-	Plane Washer		1
28	-	SPRING		1
29	-	BOLT (M3X8L)		1
30	1506889	SPONGE, THERMAL SWITCH		1
31	SP1530212	Key		1

Programming-Kit

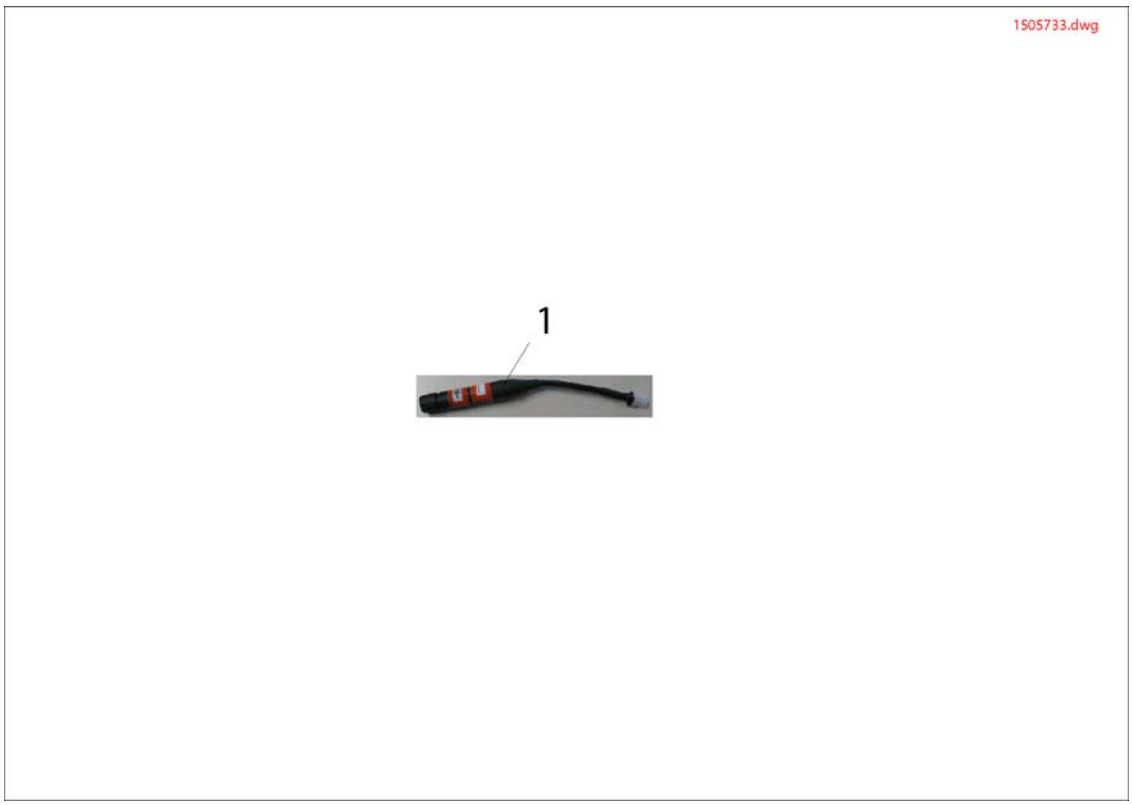

Pos.	Part number	Description	Valid from → until	Qty
-	1449280	USB Wizard Dongle Kit, EDL-USB, cpl.		1
1	1505733	Programmer Kit		1

Accessories Lynx

Pos.	Part number	Description	Valid from → until	Qty
-	1449280	USB Wizard Dongle Kit, EDL-USB, cpl.		1
8	1509434	GARAGE		1
9	1507388	HOLDER, CPL.		1
10	1528274	Crutchholder RH/LH *If retrofitting crutch holder, also order 1507388*		1
11	1505727	Rear Basket Comp. *If retrofitting rear basket, also order 1507388*		1

Yes, you can.®

EN

Belgium & Luxemburg:
Invacare nv, Autobaan 22, B-8210 Loppem
Tel: (32) (0)50 83 10 10, Fax: (32) (0)50 83 10 11
belgium@invacare.com

Danmark:
Invacare A/S, Sdr. Ringvej 37, DK-2605 Brøndby
Tel: (45) (0)36 90 00 00, Fax: (45) (0)36 90 00 01
denmark@invacare.com

Deutschland:
Invacare Aquatec GmbH, Alemannenstraße 10, D-88316 Isny
Tel: (49) (0)75 62 7 00 0, Fax: (49) (0)75 62 7 00 66
info@invacare-aquatec.com

European Distributor Organisation:
Invacare, Kleiststraße 49, D-32457 Porta Westfalica
Tel: (49) (0)57 31 754 540, Fax: (49) (0)57 31 754 541
edo@invacare.com

España:
Invacare SA, c/Areny s/n, Polígon Industrial de Celrà, E-17460 Celrà (Girona)
Tel: (34) (0)972 49 32 00, Fax: (34) (0)972 49 32 20
contactsp@invacare.com

France:
Invacare Poirier SAS, Route de St Roch, F-37230 Fondettes
Tel: (33) (0)2 47 62 64 66, Fax: (33) (0)2 47 42 12 24
contactfr@invacare.com

Ireland:
Invacare Ireland Ltd, Unit 5 Seatown Business Campus, Seatown Road, Swords, County Dublin - Ireland
Tel : (353) 1 810 7084, fax: (353) 1 810 7085
ireland@invacare.com

Italia:
Invacare Mecc San s.r.l., Via dei Pini 62, I-36016 Thiene (VI)
Tel: (39) 0445 38 00 59, Fax: (39) 0445 38 00 34
italia@invacare.com

Nederland:
Invacare BV, Celsiusstraat 46, NL-6716 BZ Ede
Tel: (31) (0)318 695 757, Fax: (31) (0)318 695 758
nederland@invacare.com, csede@invacare.com

Norge:
Invacare AS, Grensesvingen 9, Postboks 6230, Etterstad, N-0603 Oslo
Tel: (47) (0)22 57 95 00, Fax: (47) (0)22 57 95 01
norway@invacare.com, island@invacare.com

Österreich:
Mobitec Mobilitätshilfen GmbH, Herzog Odilostrasse 101, A-5310 Mondsee
Tel: (43) 6232 5535 0, Fax.: (43) 6232 5535 4
office@mobitec-austria.com, austria@invacare.com

Portugal:
Invacare Lda, Rua Estrada Velha, 949, P-4465-784 Leça do Balio
Tel: (351) (0)225 1059 46/47, Fax: (351) (0)225 1057 39
portugal@invacare.com

Sverige & Suomi:
Invacare AB, Fagerstagatan 9, S-163 91 Spånga
Tel: (46) (0)8 761 70 90, Fax: (46) (0)8 761 81 08
sweden@invacare.com, finland@invacare.com

Switzerland:
Mobitec Rehab AG, Benkenstrasse 260, CH-4108 Witterswil
Tel: (41) (0)61 487 70 80, Fax.: (41) (0)61 487 70 81
office@mobitec-rehab.ch, switzerland@invacare.com

United Kingdom:
Invacare Limited, Pencoed Technology Park, Pencoed, Bridgend CF35 5HZ
Switchboard Tel: (44) (0)1656 776200, Fax: (44) (0)1656 776201
Customer services Tel: (44) (0)1656 776222, Fax: (44) (0)1656 776220
UK@invacare.com

© Invacare® International Sarl . All Rights Reserved.